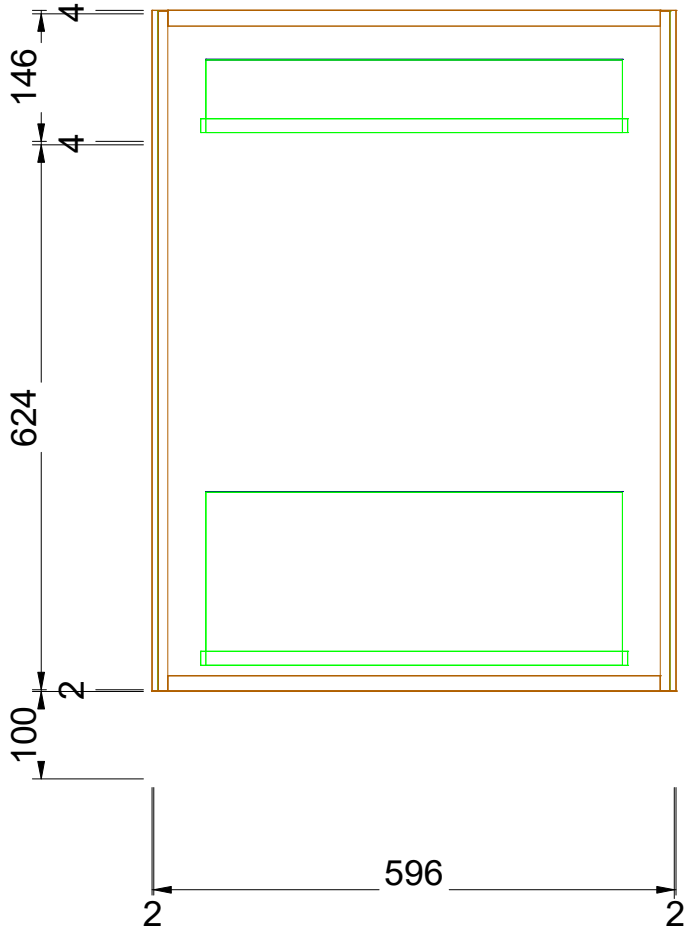

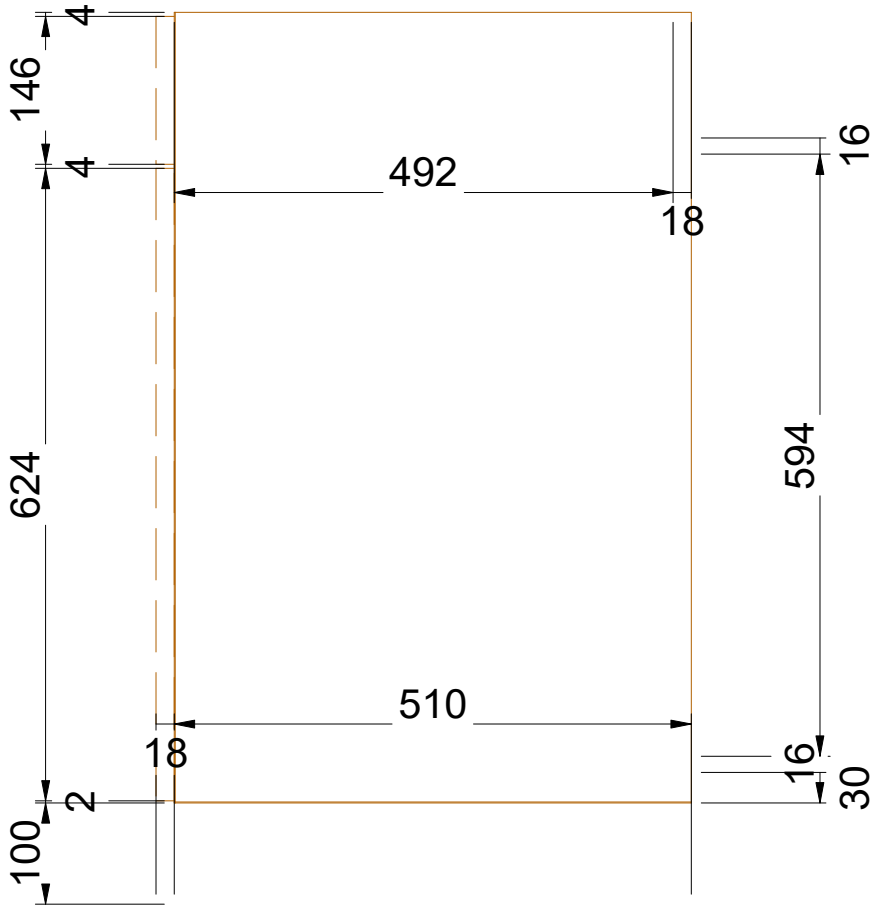

S60Zad

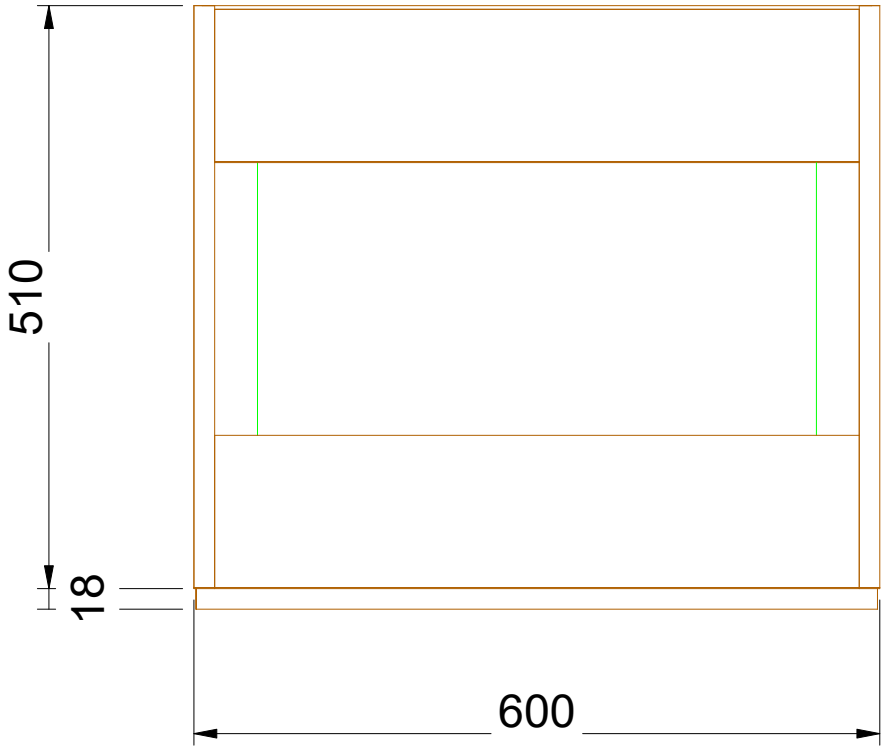

S60Zad

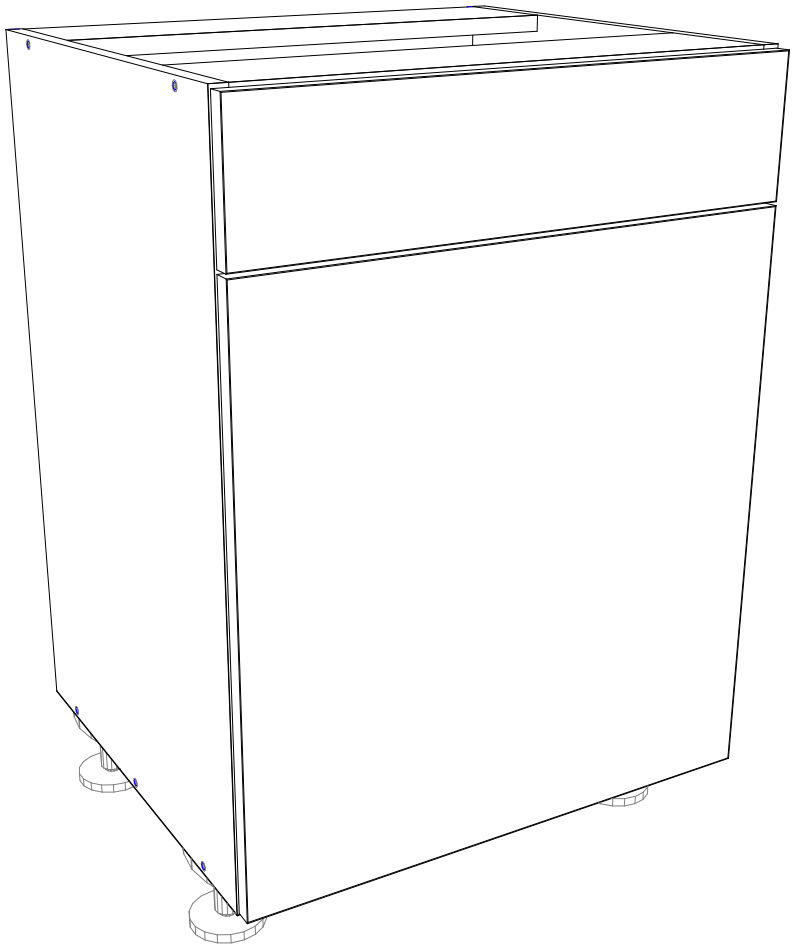

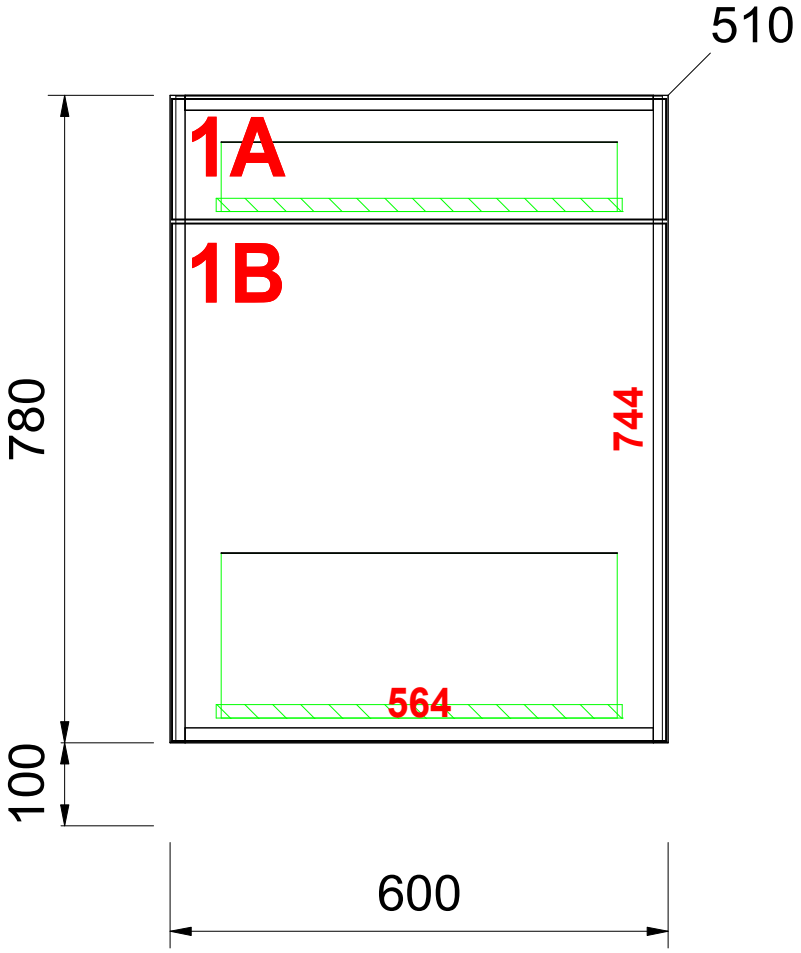

S60Zad